A44-P

INSTRUCTION HANDBOOK

CE

For sales, service and spare parts

APM Mouldings Chamton Pty Ltd

APM Mouldings 120-130 Bolinda Rd Campbellfield, VIC 3061

Ph: 03 8301 9199 | Fax 03 9357 4077 | Email apmoffice@chamton.com | www.apm-mouldings.com.au

Australian Owned Family Company | Quality Moulding Manufacturers and Distributors

INDEX

1. GENERAL INFORMATION 4
2. MACHINE DESCRIPTION 6
3. SAFETY 8
4. HANDLING AND INSTALLATION 9
5. OPERATING MODES 16
6. MAINTENANCE 17
7. DIAGNOSTIC 18
8. SPARE PARTS 20
9. MACHINE DEMOLITION 20
10. ATTACHMENTS 20

1. GENERAL INFORMATION

The identification plate illustrated is affixed directly onto the machine. The plate contains all identification details and indications necessary for safe operation.

1.2 TECHNICAL SERVICE REQUEST PROCEDURES

For any requirement, please contact the Manufacturer's Customer Service.
For any request for technical service, list the data on the identification plate, the approximate number of hours the machinery has been used and the type of malfunction.

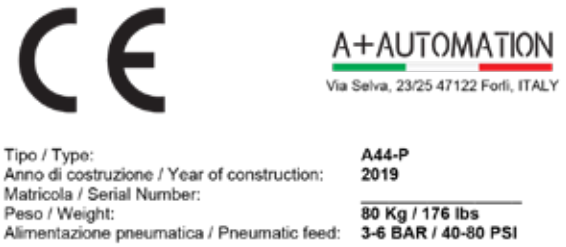

1.3 CERTIFICATION

The machine is produced in conformity to the pertinent European Community Norms in force at the moment of its introduction on the market.

1.4 WARRANTY

- The replacement of defective parts is warranted (counting from the date written on the delivery bill) for a period of:
- Mechanical components - 24 months
- Pneumatic parts - 12 months
- Electric and Electronic parts - 12 months

The driver blade is tested for about 1.000.000 working cycles.
The warrant does not include sending technical staff. The repair will be performed at A-Plus Automation's facility and the freight of shipment will be entirely charged to the Customer.
The warranty does not cover the damages caused by an inappropriate use of the machine or not corresponding to the instructions described in this handbook.
The warranty decays in case of unauthorized modifications or because of accidental damages or tampering performed by unqualified personnel.
The warranty also decays if you use wedges different from the original special steel A+ ones.
To take advantage of warranty services it is necessary, at the moment you receive your machine to completely fill out the warranty card and send back as soon as possible to A-Plus Automation.
The warranty will be valid after it is received & recorded at A-Plus Automation.

1.5 PRE-ARRANGEMENTS CHARGED TO THE CUSTOMER RESPONSIBILITY

It is the customer's duty, on times agreed with the producer, to execute what is indicated in the following documentation.
Things normally charged to the customer:

- Premises predisposition, included building works
- Pneumatic supply of compressed air (see at the paragraph 4.6.1)
- Machine power supply, observing the current norms of Country where the machine is installed (see at the paragraph 4.6.2)

1.6 PURPOSE OF THE MANUAL

The manual herein, part and parcel with the machinery, has been designed and built by the manufacturer with the purpose to supply the necessary information to the persons authorized to operate the machinery during its useful life.
As well as adopting an appropriate utilization technique, the recipients of the information must read and strictly apply them.
This information is supplied by the manufacturer in its own language (Italian) and may be translated into other languages to satisfy statutory and/or sales needs.
A little time dedicated to the study of this information, will permit the user to avoid health and safety risks to personnel and economic loss.
The translation in the language of the country of use, supplied by the manufacturer, its representative or whoever brings the machine to such linguistic area, must be carried out from the "ORIGINAL INSTRUCTIONS" and must display the phrase "TRANSLATION OF THE ORIGINAL INSTRUCTIONS".

In the event that the manual herein contains additional information concerning the fittings of the machinery, said information does not interfere with the reading of the manual.
Keep this manual for the entire duration of its useful life in a well known and easy to access place, available for reference any time the need should arise.
The manufacturer reserves the right to make modifications with no obligation to supply a prior notification.

1.7 SYMBOLS

SYMBOL	MEANINGS	
	DANGER	Indicates situations involving great hazard risks which, if overlooked, could put people's health and safety in great danger.
	WARNING	Indicates technical information of particular importance which must not be overlooked.
	INQUIRY	The user is requested to check the proper positioning of any element of the machine, before operating a certain command.

2. MACHINE DESCRIPTION

2.1 GENERAL MACHINE DESCRIPTION

The A44-P Frame Assembling Machine have been realized to assemble any kind of frame.
The machine versions is equipped with a Wedges driver blade mounted on a movable carriage which, manually shifted by the operator allows the quick insertion of Wedges in different positions.
The A44-P being of simple construction and extremely easy to use, make them possible to join with absolute precision any kind of moulding by means of special steel A+ wedges.

2.2 CONSTRUCTIVE CONFIGURATION

The main components constituting the machines are:

- Frontal clamping device to have a perfect joint
- Brake on position to insert easily intermediate Wedges in any profile
- Pneumatic balancing that allows to work easily when the working bench is tilted
- Adjustable tilting fences.
- Floor stand
- Fixed and magnetic changeable pressure pads to have the proper clamping of any profile
- Dual functions foot operating pedal for separate control of clamping and nail insertion
- Pneumatic opening of wedges magazine for a very quick reloading
- Nail heads sizes 7, 10 and 15 mm.

2.3 AXIS

- X AXIS
  Movement horizontal.
- Y AXIS
  Movement vertical

Picture 2.3.A - Movement directions

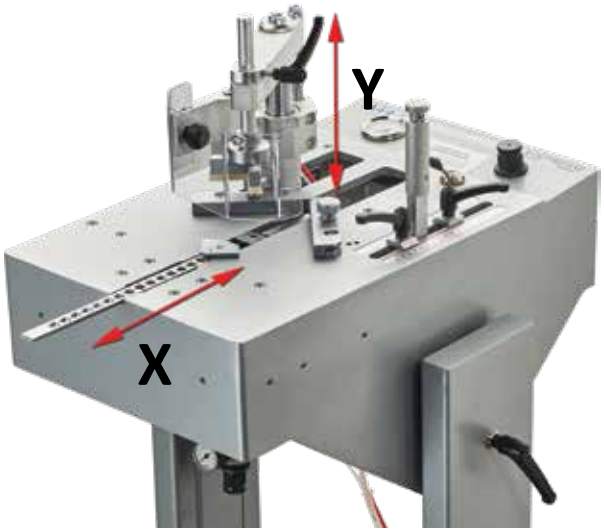

2.4 AMBIENT CONDITIONS IN THE INSTALLATION AREA

	The installation area must have adequate environmental conditions.

The installation area must meet the following requisites.

- Adequate lighting to European standards (recommended 250÷650 lux)
- Well ventilated rooms
- Adequate relative humidity and temperature. The permitted temperatures go from 5° to 40° C, with a humidity level not higher than 50% at 40° C or 90% at 20° C.
- The floor, as well as having an adequate load capacity for the machine weight, must be stable and levelled in order to guarantee a correct support.

2.5 SURROUNDING CONDITIONS

The machine does not need special surrounding conditions. It has to be installed inside an industrial building, lit, aired and with a compact and flat floor. The permitted temperatures go from 5° to 40° C, with a humidity level not higher than 50% at 40° C or 90% at 20° C.

2.6 LIGHTING

Premises lighting must be conformed to the norms in force in that Country where the machine is installed and has to guarantee a clear visibility and can not create dangerous light reflections.

2.6 NOISE EMISSIONS

In standard working conditions the Machine noise power level is:

- Acoustic Continuous Equivalent weighed pression A <70dB
- Acoustic Istantaneous weighed pression <130dB

	In case of any machine modification, the above mentioned levels could be changed

2.7 TECHNICAL DATA

We have listed below the Machine's data and technical characteristics to which you can make reference for any eventual contact with your distributor for Technical Assistance.

TABLE 2. 7 A Tecnical data

Frames thickness (min-max)	5-80mm / $^{1}/_{4}$" - 3 $^{5}/_{32}$"
Frames width (min-max)	6-120mm/ $^{1}/_{4}$" - 4" $^{23}/_{32}$"
Wedges magazine capacity	n. 230
Wedges size	7, 10, 15 mm.
Wedges size on request	3, 5, 12 mm.
Pneumatic feed	BAR 3-6 / PSI 40-80
Air consumption	4,0 Nl at 6 BAR - 0.14 cf^3 at 73 PS
Weight	approx. 90 kg / 198 lbs
Height of working bench	960 mm / 38"
Overall dimensions	600x520x1220mm - 24" x 20" x 48"

2.8 EQUIPMENT SUPPLIED

2.8.1 Standard accessories	*2.8.2 Optional accessories*
• N.1 wedge claw-head mm. 7	• Metal support extensions
• N.1 wedge claw-head mm.10	• Wedges claw-heads size 3-5-12 mm
• N.1 wedge claw-head mm.15	• Horizontal clamping w/wider leaf (see Pict. 1)
• N.1 L shaped pressure pad	
• N.1 Allen Wrench 5 mm. claw-head replacement	
• N.1 Brass rod magnet to remove Wedges	

3. SAFETY

3.1 GENERAL WARNINGS

- The manufacturer, during the design and manufacturing stages, has paid special attention to the aspects that might jeopardize the safety and health of the personnel that operates the machinery. As well as the compliance with current regulation on the matter, the manufacturer has adopted all the “rules of good craftsmanship”. The purpose of this information is to make the user aware to pay special attention in order to foresee any risk. There is no substitute for carefulness. Safety also lies in the hands of all operators that work on the machinery.
- Carefully read the instructions of the manual supplied with the machinery and the ones directly fitted on the machinery, especially the ones concerning safety. A little time dedicated to the study of this manual will prevent unpleasant accidents.
- Pay attention to the meaning of the symbols of the plates fitted on the machinery; their shape and colour are important for safety purposes. Keep them readable and comply with their information.
- Do not tamper with, do not dodge, eliminate or bypass the safety devices installed on the machinery. The non compliance with this requirement may cause serious risks for personnel’s safety and health.
- The personnel that carries out any type of operation during the entire useful life of the machinery must have specific technical competence, special skills and experience acquired and acknowledged in the specific sector. The lack of these requisites may jeopardize the safety and health of personnel.
- During operation only use the personal protection clothes and/or devices listed in the instructions supplied by the manufacturer and the ones provided for by current regulations on safety at work.
- During the normal use or for any intervention, keep the surrounding area in adequate condition, especially the one accessing the controls, in order to avoid jeopardizing the safety and health of personnel.
- The operator, as well as being adequately informed on the use of machinery, must possess skills and competence adequate to the type of working activity to perform.
- The machine must only be used for the applications intended by the manufacturer. Only use the machinery for the purposes intended by the manufacturer. The employment of the machinery for improper uses may cause risks to the safety and the health of personnel and economic loss.
- Provide appropriate containers to stock the pieces you will be working with.
- Keep your foot off of the pedal and disconnect the main air supply while performing any machine maintenance .

3.2 SCHEDULED USE

The Machine is designed and built to execute junctions of frames.
The machine is projected for manual use only (under operator control).

3.3 INADVISABLE USE

The machine can not to be used:

- For uses different from those listed in 3.2 paragraph
- In an explosive or aggressive atmosphere where there is a high density of dust or oily substances suspended in the air
- In a flammable atmosphere
- Outside in all weather severity
- For molding to be assembled not suitable with the machine’s characteristics.

3.4 DANGEROUS AREAS

The area of frames assembly is defined as the “working area”
The dangerous areas of machine, include the movable parts and surrounding zones.

Figure 3.4.A - Working area and dangerous zones

3.5 PROTECTION DEVICES

The machine is equipped with protection shield for persons exposed to the risks due to the transmission of mobile elements taking part in working (driver blade, horizontal clamp, vertical clamp).

3.6 STOP MODE

Uncontrolled stop	It is obtained by disconnecting the quick connect fitting from the main air supply.
Controlled stop	It is obtained by lifting the foot from the pneumatic pedal not allowing the horizontal clamping

3.7 SAFE WORKING PROCEDURES

	The machine is projected and realized to eliminate any risk connected with its use. **The user is requested to achieve an adequate training to be instructed by their distributor.**

The other risks related with using the machine are:

- Finger crushing in the frontal and vertical clamp working area

It is necessary to carefully follow the following instructions:

1. Keep the fingers away from frontal and vertical clamp working areas
2. Disconnect the air pressure and during any maintenance interventions
3. Keep the foot away from the pedal during machine maintenance

3.8 DESCRIPTION OF SAFETY SIGNS

Some of these signals are applied on the machine. Their meaning is specified on their side.
Make sure that the plates are perfectly readable, otherwise replace them with new ones to be fitted correctly in place

Adhesive sign concerning the finger danger zone

4. HANDLING AND INSTALLATION

4.1 HANDLING

The personnel in charge of loading, unloading and moving the machinery must possess the skills and experience acquired and acknowledged in the specific sector, and must thoroughly know the lifting means to be employed.
The machine has to be shipped in a safe way to avoid any damage to its parts

- All the protections and guard devices must be properly closed and locked.
- The machine has to be shipped like it is positioned for installation.
- Before the shipment it is necessary to lubricate the parts which are not painted.
- According to the type of shipment, it is necessary to protect the machine from any jarring impact or stress

Machine total weight: about 90 Kilos / 198 lbs

	Lifting must be done by using a specific device.

4.2 WAREHOUSING AND STORAGE PROCEDURES

- In order to avoid that the components cause dangers or are damaged, the storage area must be covered (preferably a closed area) and accessible only for authorised personnel.
- Avoid corrosive materials that could touch the machine
- Lubricate the parts which are not painted or chromed.

4.3 UNPACKING

According to the installation requirements, the personnel authorised by the manufacturer will unpack the components in the most suitable way and will check their integrity. Keep all packages (carton box, pallets, etc.) for future use and dispose of the protection materials (nylon, polystyrene, etc.) according to the laws in force.

4.4 PRELIMINARY ARRANGEMENTS

In order to install the machine it is necessary to prepare a working area (a table) adequate to the machines dimensions and the length of moulding you will be working with. To fulfill the characteristics of precision and steadiness, the bench frame assembling machines must be positioned on a solid and leveled plane able to sustain the weight of the machine. The bench must be studied and prepared by the customer and/or qualified staff.

4.5 PNEUMATIC CONNECTION

The machine is controlled by a foot pedal that allows the activation of frontal clamp and by a joystick that controls the vertical clamping snd wedge insertion.

Screw the supplied manometer in the air filter lubricator placed on the floor stand right side (see pict. 4.6.1.1).

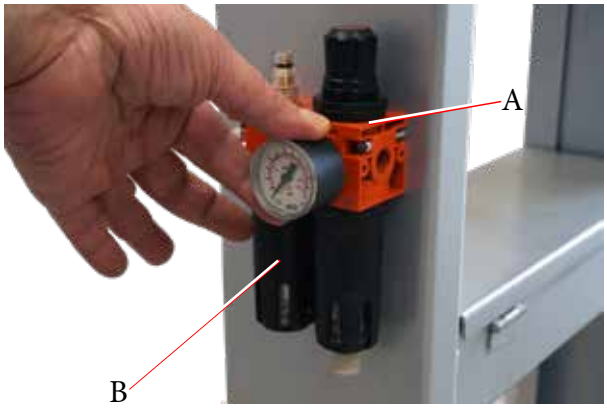

Picture 4.6.1.1

Use the supplied fast clutch fitting to connect the air compressed system. You could use also another fitting suitable with your pneumatic system (see pict. 4.6.1.2 and 4.6.1.3).

Picture 4.6.1.2

Picture 4.6.1.3

Once connected the machine with the pneumatic system, check the functioning of the 2 positions foot pedal and that of the Wedges firing lever (2 positions control lever).
The proper functioning of the foot pedal is the following:

- when the foot pedal is PRESSED HALF WAY it activates the horizontal clamp

The manual control lever with 2 positions button activates the following commands:

- Pressing the foot pedal it activates the locking of the horizontal clamp;
- Pressing pushbutton half-way down, it activates the vertical clamp and the position brake;
- The Pushbutton pressed full down activates the wedge driving.

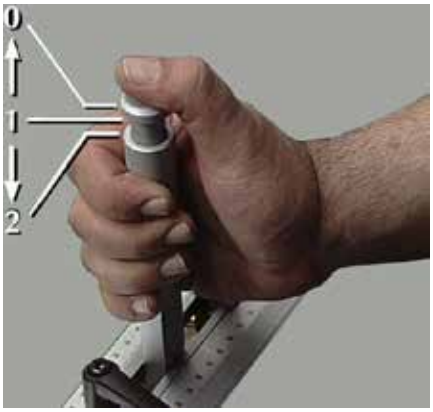

	Check that pressure value showed on the pressure dial (B) of the lubricator/reducer filter is between 6 and 8 Bar (see picture 5)

	DO NOT adjust by using the A regulator of lubricator/reducer filter (see 4.6.1.1)

4.6 PRELIMINARY CONTROLS

Before setting up the machine, execute checks to prevent mistakes or accidents during setup.

- Verify that machine has not been damaged.
- Verify the pipes integrity

4.7 MACHINE ARRANGEMENT

4.7.1 Wedges magazine loading

To load the wedge magazine proceed as follows:

- Move the claw pusher backwards by flipping the special lever located on the right side of the machine working bench. This will give you access to the nail magazine (see pict. 4.7.1.1).

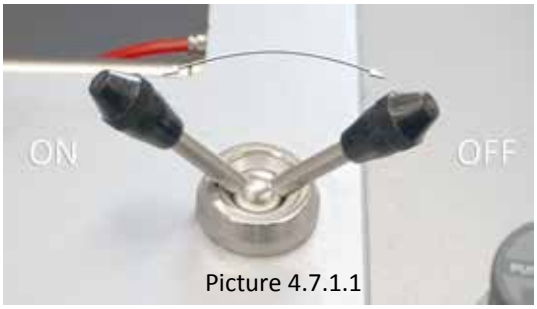

Picture 4.7.1.1

- Insert one or more nail strips into the magazine. Make sure that the sharpened edge of the nails (glue side) faces up and that they are loaded with the V of the nails pointing in the direction indicated in the figures 4.7.1.2 and 4.7.1.3. Check to see if the nail size is suitable with the type of claw head mounted.

Picture 4.7.1.2

Picture 4.7.1.3

- Move the claw pusher forward by flipping the control lever (see pict. 4.7.1.1)

4.7.2 Nail guide head replacement to change Wedges size

The nail guide head must be changed each time you use nails of different sizes. Proceed as follows to replace it:

- Loosen the locking screw of the nail guide head using the proper 5 mm Allen wrench (the screw is on the opposite side from the nails magazine(See pic. 4.7.2.1)
- Take out the nail guide head

Picture 4.7.2.1

- Move the clawpusher backwards (as per par. 4.7.1).
- Remove all the nails that are still in the magazine (using the proper brass magnet, if necessary). See pic. 4.7.2.2.

Picture 4.7.2.2

- Insert the new nail strip (of desired height) into the magazine
- Close the magazine (as per par. 4.7.1).
- Insert the new size nail guide head to match the nails you will be using (see pic. 4.7.2.3).
- Tighten the locking screw of the nail guide head (see pic. 4.7.2.1).

Picture 4.7.2.3

4.8 ADJUSTMENTS

The machine has been completely tested and checked in Alfa Automation plants before its shipment. All the operator has to do is perform the following adjustments:

4.8.1 Setting stops for Wedges positioning

The working stroke of the driver blade is adjusted by 2 stop handles positioned on a measurement gauge (see fig. 4.8.1). The stop located inside the hand lever (operator side), refers to the Wedges rear position; the located in front of a.m. lever refers to the Wedges external position.
The carriage with the driver blade is positioned by shifting the handle from the eternal position to the rear one.

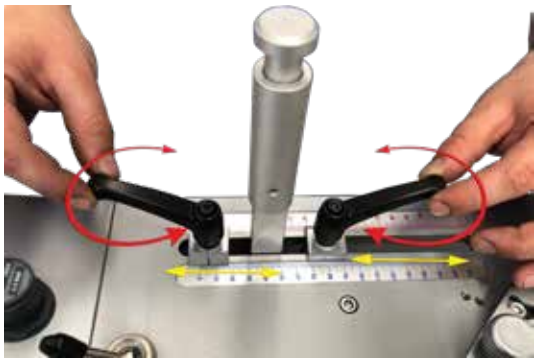

Picture 4.8.1

4.8.2 Vertical clamp adjustment

The vertical clamp position can be adjusted by the side-handle. Proceed as follows to position properly the vertical clamp:

- Loosen the side clamp (see picture 4.8.2.1) by using the handle and adjust the pressure pad height over the frame (it is advisable to adjust an height between 5 and 8 mm to avoid any accidental fingers crushing).

- Tighten the handle once reached the proper position
- Activate the vertical clamp by pressing half way the foot pedal and then the control button or pressing full down the full pedal.
- Check that the mouldings to be assembled are properly clamped.

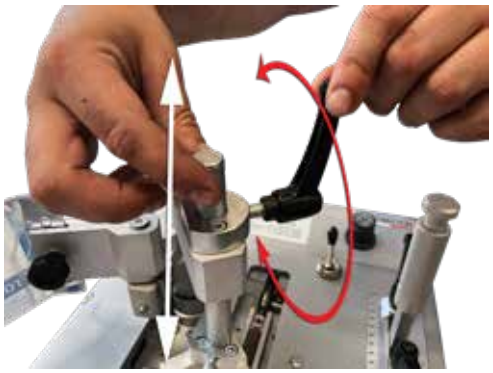

Picture 4.8.2.1

4.8.3 Horizontal clamp adjustment

The Frontal Clamp (horizontal clamp) has a series of holes in the flat bar (see Pict. 4.8.3.1) that lock into a peg in the front channel. Lift the bar to take it out of its initial position and make it move forward and backward.
To lock the bar it is sufficient to insert it into the proper peg located at the centre of the guide channel.

Proceed as follows to position the Horizontal Clamp correctly:

- Remove the bar from the peg (lifting it by about 10-15 mm) and move it forward up to reach the mouldings to be assembled;
- Lower the bar to allow the insertion of tracking screw and the locking in the next position.

Picture 4.8.3.1

	In case of continued use without needing to remove the frontal clamp from its position, it is possible to fix it into the peg using the proper screw. **When shipping the machine it is advisable to lock down the frontal clamp by using the supplied knob.**

4.8.4 Fences adjustment

Machines are equipped with a fence composed by two separate parts.
Each part of the fence (right and left) is equipped with a knob that allows the tilting of supports.
The use of this fence is suggested for working frames with irregularities or little cambers on the external side.
If once the frontal clamping is inserted, the combining of the mitres is not perfect, the tilting fence can compensate such a fault.
For 90°(4 sided frames), 120°(6 sided frames) or 135° (8 sided frames) junctions, setting properly the two fence supports (see fig. 18-19-20).
To modify the position of the two fence supports, proceed as follows:

- Remove the external screw by using the 5 mm Allen wrench
- Release the internal screw and shift the fence up to reach the holes located on the working bench

The exact position of fence supports can be obtained with the help of a special fence.
Make sure that the 120° or 135° angle formed by the two supports is exactly centered on the internal vertex of Wedges claw head.

Picture 4.8.4.1

4.8.5 Protective shield adjustment

The machine is equipped with a protective shield (see pict. 4.8.5.1) made of transparent plastic material, to avoid the operator accidental fingers crushing.

Proceed as follows to adjust the protection shield:

- position the mouldings to be assembled on the working bench
- loosen the screw shaped handle fixing the protection and lift or lower it at an height of about 6-8 mm from mouldings to be assembled;
- tighten the screw shaped handle to lock the protection shield.

Picture 4.8.5.1

	The protection shield opening, effected by its overturning, causes the control pedal deactivation.

Even if the protective shield is properly adjusted, it is necessary following instructions listed below:

- Keep the fingers away from the frontal and vertical clamp working area.
- Disconnect the pressure supply during any maintenance intervention.
- Keep your foot off of the pedal while adjusting the machine.

4.8.6 Working pressure adjustment

The working pressure must be adjusted to the hardness of the mouldings to be assembled.

The pressure regulation allows you to change the clamping pressure of mouldings to be assembled.
Too high of a working pressure can cause a poor junction and (especially on small-size frames) the moulding could be crushed.
Too low of a working pressure can cause an incomplete insertion of the nail into the frame.
The working pressure is adjusted by means of the regulator on the panel (see fig. 19).
Proceed as follows to adjust the working pressure:

1. Pull up the regulator cap by about 3÷4 mm. This will unlock it.
2. Turn it clockwise to increase the pressure and counter-clockwise to decrease it.
3. Push the regulator cap back down to lock it into position

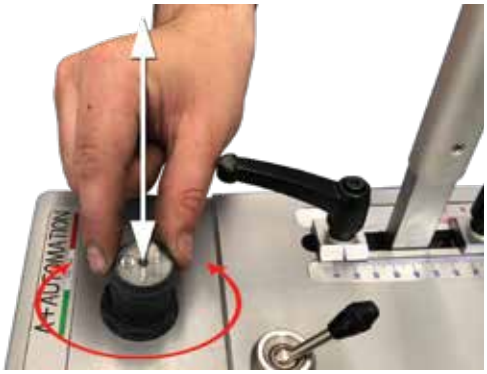

Picture 4.8.6.1

DO NOT ADJUST the pressure if the machine is not connected to the air supply.

The suggested pressures are:

Soft woods	(samba,.....)	1.5 - 2.0 Bar
Medium	(ramin,.....)	2.0 - 3.0 Bar
Very hard woods	(oak, MDF)	3.0 - 5.0 Bar

The above listed values apply to 7 and 10 mm high Wedges.
Increase the pressure by 10 % for 15 mm high Wedges.
When stacking 2 or more Wedges, increase the working pressure by 10/15 %.

In order to allow an easy use of the machine tilted back ,the A44-P is equipped with a ballast cylinder with a regulator (Pict. 4.8.6.3) and a surge tank (located on the floor stand) that provide an air cushion to balance the weight of internal components when the machine is tilted.

To obtain an optional regular balancing, set the pressure at:

- 0 BAR, when the machine is flat
- 1,0÷1,2 BAR, when the machine's tilted

Picture 4.8.6.3

DO NOT ADJUST other pressure regulator not described in this manual: keep them as set at the mfactory to avoid machine malfunctions.

4.9 ITEMS TO BE PERFORMED BEFORE OPERATING THE MACHINE

Once the machine has been properly installed (as previously described), check that:

- The magazine is loaded with the type of Wedges suitable with the mouldings to be assembled
- The adjustment of the vertical and horizontal clamps are correct (chapter 4.8.2 and 4.8.3)
- The protective shield is properly positioned (see chapter 4.8.5)
- The working pressure is adequate to the wood hardness (see chapter 4.8.4)
- The mouldings to be assembled are properly positioned on the work bench
- Pressing down the pedal to activate the frontal clamps so to hold the frame properly
- Move the position handle to the inserting position and press half-down the pushbutton to activate the brake and the verticla clamp

Press the pushbutton all the way down to insert the wedge

	If you want to insert 2 or more wedges one upon the other in the same position, you must release the pushbutton until halfway and then press it full down again to insert the second wedge

5. OPERATING MODES

5.1 OPERATORS

The machine has been designed to be used by only one operator.
The operator, as well as being adequately informed on the use of machinery, must possess skills and competence adequate to the type of work to be performed.
Even after being adequately informed, during the first use, if necessary, simulate some operating maneuvers to identify the controls, especially the ones for starting and stopping the machinery and their main functions.
How to operate in case of emergency , where to find the individual protection means and how to use them properly.

5.2 DESCRIPTION OF FUNCTIONS

The machine has only one possible operating mode:

- manual mechanic functioning by using the pneumatic foot pedal and the manual joystick.

Press the foot pedal down: the horizontal clamp is activated.

The handle/joystick allows the shift of positioning of Wedges firing group. According to the use of the foot pedal, the joystick allows several operations:

If the foot pedal is pressed down:

- pressing the button half way, the vertical clamp and the brake are activated
- pressing the button full down, the Wedge is fired.

To make a junction, the operator must proceed as follows:

1. position the mouldings to be assembled on the machine working bench
2. set the insertion limits by mean of the stops along the joystick stroke
3. adjust the horizontal clamp position
4. adjust the vertical clamp height
5. press down the foot pedal to activate the frontal clamp
6. shift the joystick on the 1st inserting point
7. press the button half way to activate the vertical clamp
8. press the button full down to insert the Wedge

	Take care: if you want to stack 2 or more Wedges in the same position, you must release the button up to half way and then press again it full down to insert the 2nd Wedge and so on.

9. completely release the button to rearm the driver blade and release the brake on position
10. shift the joystick in the next inserting point
11. repeat the steps 6, 7, 8, 9 and 10.

When working with big sized frames, on the machine can be mounted a working bench extension (metal or wooden), and it can work in tilted position.
Usually, when the machine is tilted back, the operator working position is opposite to the normal one.
To tilt back the machine, operate as follows:

- loosen the handle located on floor stand right side (pict. 5.2.1-A)
- tilt the machine up to reach the desired angle (pict. 5.2.1-B)
- tighten the handle to lock the machine in position.

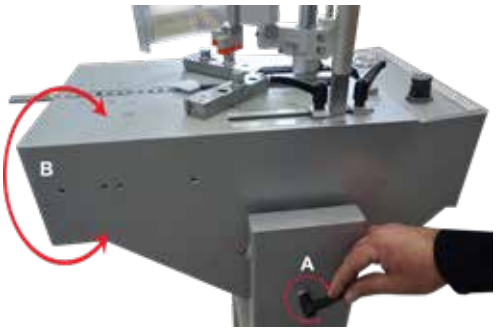

Picture 5.2.1

Picture 5.2.2
A44-P in tilted position with metal extension arms

5.3 TIPS FOR QUALITY JUNCTIONS

a) Wedge types

In order to allow the machine to make excellent quality joints using different materials, it has been necessary to manufacture different Wedges types for different uses (see attachment D).
Wedges can be classified in three different groups:

Material	Suggested code	Color Ref.
soft materials (wood, soft plastic)	**SW**	Green
for medium materials (wood, ...)	**MW**	Gray
for hard materials (wood, MDF, HDF)	**HW**	Red

b) Assembling positions

It is advisable to operate as follows in order to achieve the best results in terms of junction quality:

- Never drive Wedges near the external vertex. The minimum recommended distance from the external vertex is at least 10 mm.
- When you want to make the junction using only one Wedge, the most suitable position is in the middle of the moulding (see fig. 21)
- In case you want to insert 2 or more Wedges into each junction, we recommend you to insert the most external one 1/3 from the external vertex and the most internal one 1/4 from the internal vertex (not less than 5mm).

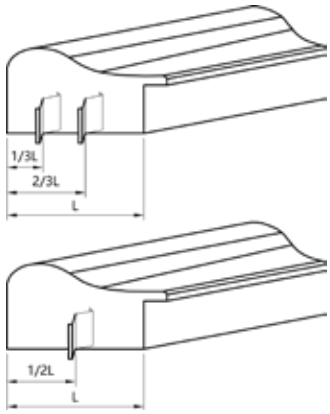

picture 5.3.1

5.4 MACHINE STOP

To stop it, lift your foot from the pedal.
It is possible also to disconnect the quick connect fitting from the air supply.
In case on long inactivity periods it is necessary to disconnect the quick connect fitting from pneumatic system.

6. MAINTENANCE

6.1 RECOMMENDATIONS FOR MAINTENANCE

Carry out maintenance or repair operations with the machine isolated from air supply, as indicated by the Manufacturer.

	Before performing any cleaning intervention, the operator must disconnect the air supply

During the maintenance or repair operations is suggested to proceed as follows:

- Before starting any operation place a sign “machine under maintenance” in a well visible position.
- Do not use solvents or flammable materials
- Do not step on the machine parts, because they have not been projected to sustain the weight of persons.
- Put on a pair of safety glasses.
- Once all the operations are finished replace any protections and shields you removed or opened.

6.2 CLEANING THE MACHINE

The machine is of simple construction and the mechanical parts do not require any special maintenance.
Keep the machine in maximum efficiency conditions and perform all the scheduled maintenance operations provided by the manufacturer. Good maintenance will result in better performance, a longer operating life and keep the safety requirements unchanged over time.
Follow the rules listed below:

- Regularly remove glue or other residues from the wedges claw-head and from the upper part of the driver blade;
- Always keep the wedge magazine clean and without residues.
- Remove any residues from the wedges guide “L” shaped support.
- Do not use water to clean the machine, otherwise metallic parts may rust.

6.3 ROUTINE MAINTENANCE OPERATION

Frequency	Ispection	Action
Every 1.000.000 wedges shot	wedges driver blade	Replace
Every 300 working hours	Movable parts lubrication	Lubricate
Every 5.000.000 wedges shot	Wedges claw-heads	Replace
Every 5.000.000 wedges shot	“L” shaped supports (wedges guide)	Replace
20 million of wedges shot	Valves and Reducers	Check and in case, replace
Every 6.000.000 wedges shot	Frontal and vertical clamping gaskets	Replacement in case of leak of air

6.4 RECOMMENDED OIL

Use CASTROL MAGNA GC 32 or equivalent oil

	Unsuitable lubricants may cause valve seal problems (seals may become too large) and consequent Valve jamming.

7. DIAGNOSTIC

7.1 SAFETY WARNINGS

The interventions must be executed by personnel properly trained for this specific machine and they must take all precautions in order to avoid accidental starts.

During the tests, it is suggested to remove the vertical clamp assembly or position it to its full upwards position.

TABLE 7. 2 - A

TROUBLE	POSSIBLE CAUSE	REMEDY
Pressing the foot pedal the Wedges ejection is irregular	Insufficient working pressure	• Check that the minimum value indicated from main regulator is higher than 3 Bar
	Wedges wrongly positioned into the magazine	• Check that the Wedges sharpened side (glue side) faces up • Check that Wedges V vertex is pointing toward machine's external side
	Guide channels damaged or jammed	• Check that the guide channels are not dirty or jammed
	Claw pusher has insufficient thrust	• Check that the pressure of the regulator feeding the claw pusher cylinder is at least 2 Bar. If necessary, increase it by 10%.
	Claw head not suitable with Wedges size	• Check that the number engraved on the wedge claw head match the Wedges size
	Faulty Wedges	• Replace the Wedges
	Insufficient working pressure	• Check that the air pressure coming out from the compressor is at least 3 Bars.
	Opened Wedges magazine	• Close the magazine by means of the special lever
	Faulty valves	• Replace the foot pedal valve • Replace the control valves
Pressing the foot pedal for several times the machine's working that was correct at the beginning becomes irregular later	Jammed valves because of surplus of oil or condensation	• Remove the surplus of oil and condensation from the valves by disconnecting the air lines one by one . This will force out the oil/water.
Pressing the foot pedal the working pressure indicated on the regulator deeply decreases	Faulty pressure regulator	• Replace the regulator
	Air supply line too long or of inadequate diameter	• Replace the air line with a new one of bigger diameter
Pressing the foot pedal the machine works properly, but once the pedal is released you can note a certain delay in the re-positioning of the driver blade and/or vertical clamp cylinders	Faulty or jammed valves	• Remove the surplus of oil and/or condensation • Replace the foot pedal valve • Replace the faulty control valves
Wishing to insert several Wedges one upon the other in the same point, they do not stack properly or tilt during their insertion	Unsuitable Wedges	• Replace the Wedges with suitable ones
	Poor frames clamping (the frame moves during the Wedge insertion)	• Check and reposition the vertical and frontal clamps • Increase the pressure by using the regulator • Replace the pressure pad with the proper one
	Wore and torn driver blade	• Replace the driver blade
	Jammed driver blade	• Clean the driver blade's upper part by removing any material jamming the upper profile

7.3 TECHNICAL SERVICE REQUEST PROCEDURES

For any requirement, please contact the Manufacturer's Customer Service.
For any request for technical service, list the data on the identification plate, the approximate number of hours the machinery has been used and the type of malfunction.

E_Mail: service@a-plusautomation.com
FAX: +39-0543-480770
Via Selva, 23/25 - 47122 Forlì - Italy

In the USA please contact:

E_Mail: service@a-plusautomationusa.com
FAX: 248-851-8777
31874 Northwestern Highway
Farmington Hills, MI 48334

8. SPARE PARTS

8.1 SPARE PARTS LIST

Even though the machine has been submitted to several tests and functional checks, we listed below the components that we suggest you to have a minimum and sufficient set of. This will help guarantee the shortest possible downtime.

TABLE 8.1 - A

COMPONENT	
• WEDGES DRIVER BLADE • WEDGES CLAW-HEADS • "L" SHAPED SUPPORT (WEDGES GUIDE)	• VALVES-REDUCERS-REGULATORS • VERTICAL AND HORIZONTAL CLAMPING • GASKETS

8.2 SPARE PARTS ORDERING

We remind you that only a qualified technician can repair the machine.
Therefore we suggest the intervention of your local distributor or A-Plus Automation Center of Technical Assistance, which has access to qualified staff, proper equipment and tools, and who uses original spare parts.
To order the above spare parts, send the following data by fax, e-mail or letter:

- Model of the Machine
- Code of drawing scheme
- Reference number of spare part or group indicated on the mechanical drawing
- Code number of single or group spare part

9. MACHINE DEMOLITION

9.1 MACHINE DEMOLITION

When scrapping the machine, group components by chemical composition and dispose of separately in accordance with applicable legislation. Do not dispose of non-biodegradable materials, lubricant oils and non-ferrous articles (rubber, PVC, plastics etc.) in the environment.

10. ATTACHMENTS

10.1 DECLARATIONS

You can find here attached the following declarations

- Declaration of conformity to the Norm 89/392/CEE

10.2 SCHEMATICS

You can find here attached the following schemes:

- (A) Mechanical Schematic
- (B) Pneumatic Schematic
- (C) Plate locations
- (D) Sharpening Table

A+AUTOMATION

Via Selva, 23/25 - 47122 Forlì - Italy
Tel. +39 0543 481142 / Fax. +39 0543 480770
info@a-plusautomation.com/www.a-plusautomation.com

DICHIARAZIONE CE DI CONFORMITÀ

2006/42/CE (Allegato II parte A)

Il sottoscritto, rappresentante il seguente fabbricante

Costruttore	**A-Plus Automation S.r.l.**
Indirizzo	**Via Selva, 23/25, 47122 Forlì (FC) Italia**

ha incaricato la seguente persona autorizzata a costituire e conservare il fascicolo tecnico

Nome	**A-Plus Automation S.r.l.**
Indirizzo	**Via Selva, 23/25, 47122 Forlì (FC) Italia**

Il fabbricante dichiara qui di seguito che la macchina

Denominazione generica / commerciale	**A44-P**
Funzione	**Assemblatrice pneumatica per cornici e telai**
Modello	**A44**
Tipo	**A44-P**
Matricola	**A44.18.xxxx**
Anno di costruzione	**2018**

risulta in conformità a tutte le diposizioni pertinenti previste dalle seguenti direttive comunitarie (comprese tutte le modifiche applicabili)

2006/42/CE - Direttiva Macchine

FAC-SIMILE

L'elenco delle principali norme seguite per la parte applicabile e secondo quanto documentato nel fascicolo tecnico, è allegato alla presente dichiarazione.

Forlì, 02/01/2018.

L'amministratore, Dennis Zavoli

- LINGUA ORIGINALE -

A+AUTOMATION

Via Selva, 23/25 - 47122 Forlì - Italy
Tel. +39 0543 481142 / Fax. +39 0543 480770
info@a-plusautomation.com/www.a-plusautomation.com

CE DECLARATION OF CONFORMITY

2006/42/CE (ATTACHED II part A)

The undersigned, representing the following manufacturer

Manufacturer	**A-Plus Automation S.r.l.**
Address	**Via Selva, 23/25, 47122 Forlì (FC) Italia**

has instructed the person authorized to compile and retain the technical file

Name	**A-Plus Automation S.r.l.**
Address	**Via Selva, 23/25, 47122 Forlì (FC) Italia**

The manufacturer declares that the under mentioned machine

Generic / Trade name	**A44-P**
Funzione	**Pneumatic frame assembling machine**
Model	**A44**
Type	**A44-P**
Serial Number	**A44.18.xxxx**
Year of manufacture	**2018**

conforms with all provision applicable under the following EU Directives (including all applicable modifications)

2006/42/CE - Machine Directive

FAC-SIMILE

The list of main standards followed by the applicable part and as documented in the technical file, is attached to this statement.

Forlì, 02/01/2018.

The managing director, Dennis Zavoli

- TRADUZIONE -

DWG-A44-P-01

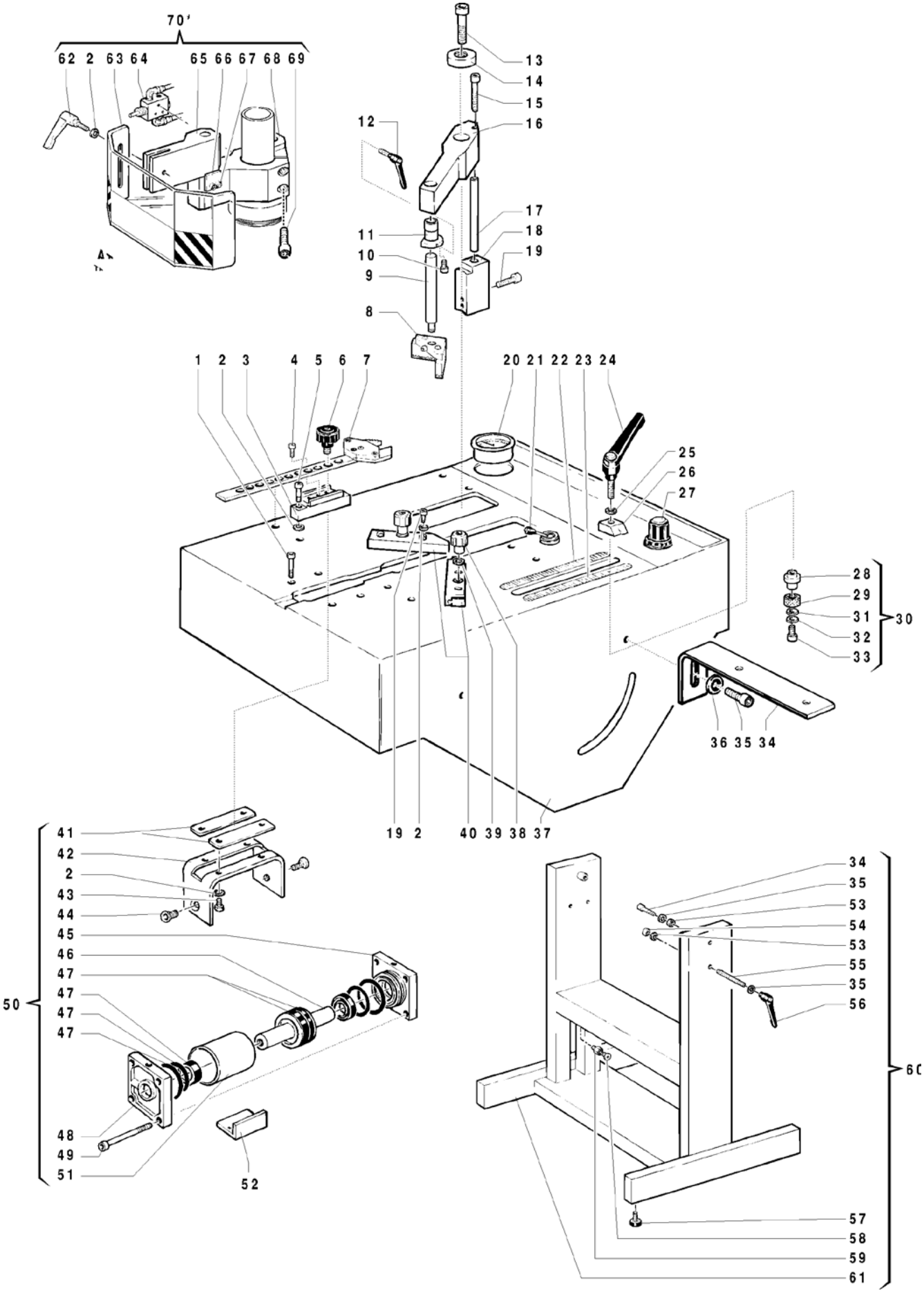
70'
62 2 63 64 65 66 67 68 69
13
14
15
16
12
17
18
19
11
10
9
8
1 2 3 4 5 6 7
20 21 22 23 24
25
26
27
28
29
31
32
33
30
36 35 34
19 2 40 39 38 37
41
42
2
43
44
45
46
47
47
47
47
50
48
49
51
52
34
35
53
54
53
55
35
56
60
57
58
59
61

DWG-A44-P-02

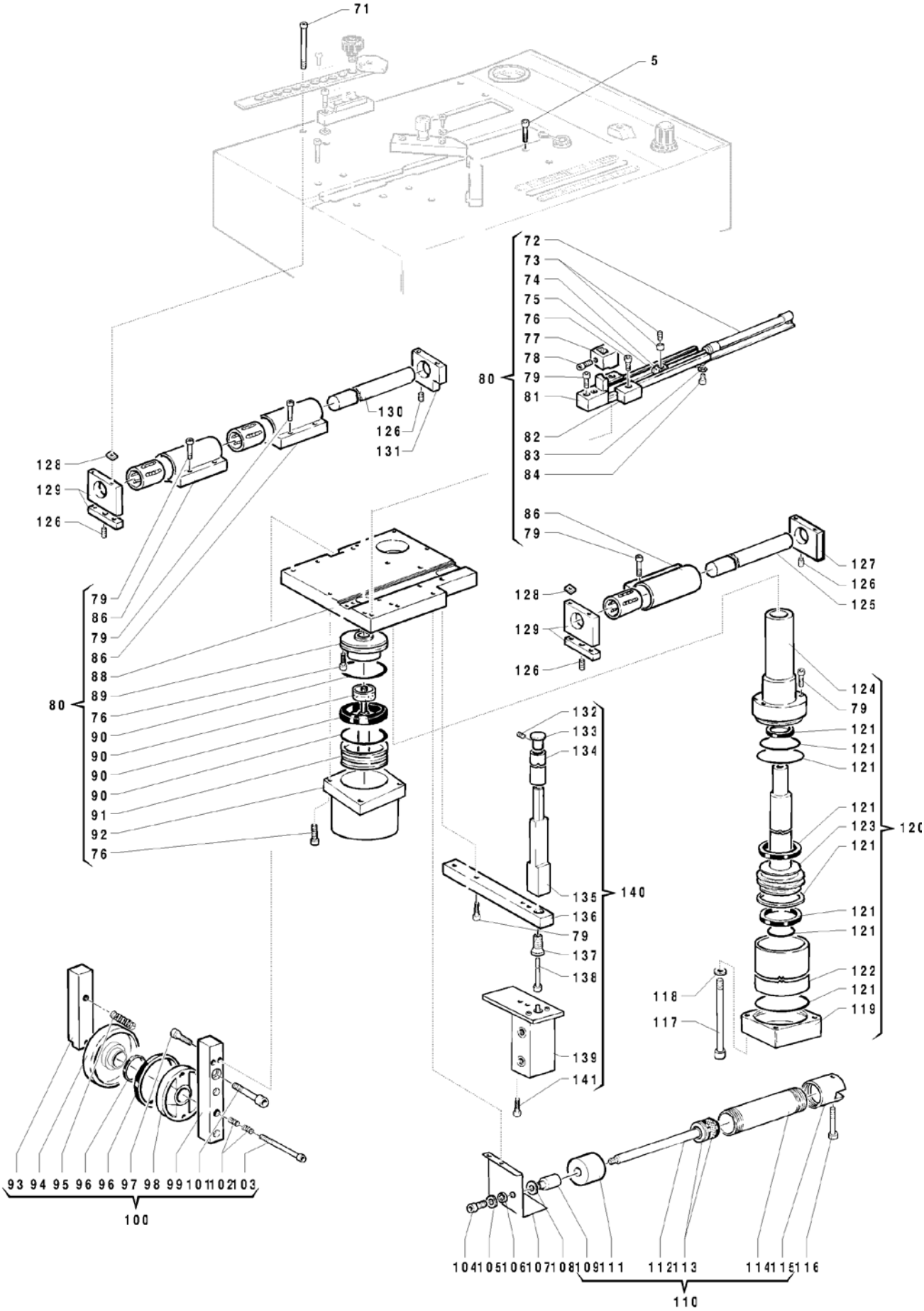
71
5
72
73
74
75
76
77
78
79
81
80
82
83
84
86
79
130
126
131
128
129
126
127
126
125
128
129
126
79
86
79
86
88
89
76
90
90
90
90
91
92
76
80
124
79
121
121
121
121
123
121
120
132
133
134
135
136
79
137
138
139
141
140
121
121
122
121
119
118
117
93 94 95 96 96 97 98 99 101 102 103
100
104 105 106 107 108 109 111
112 113
114 115 116
110

SCHEMES B - Pneumatic Scheme

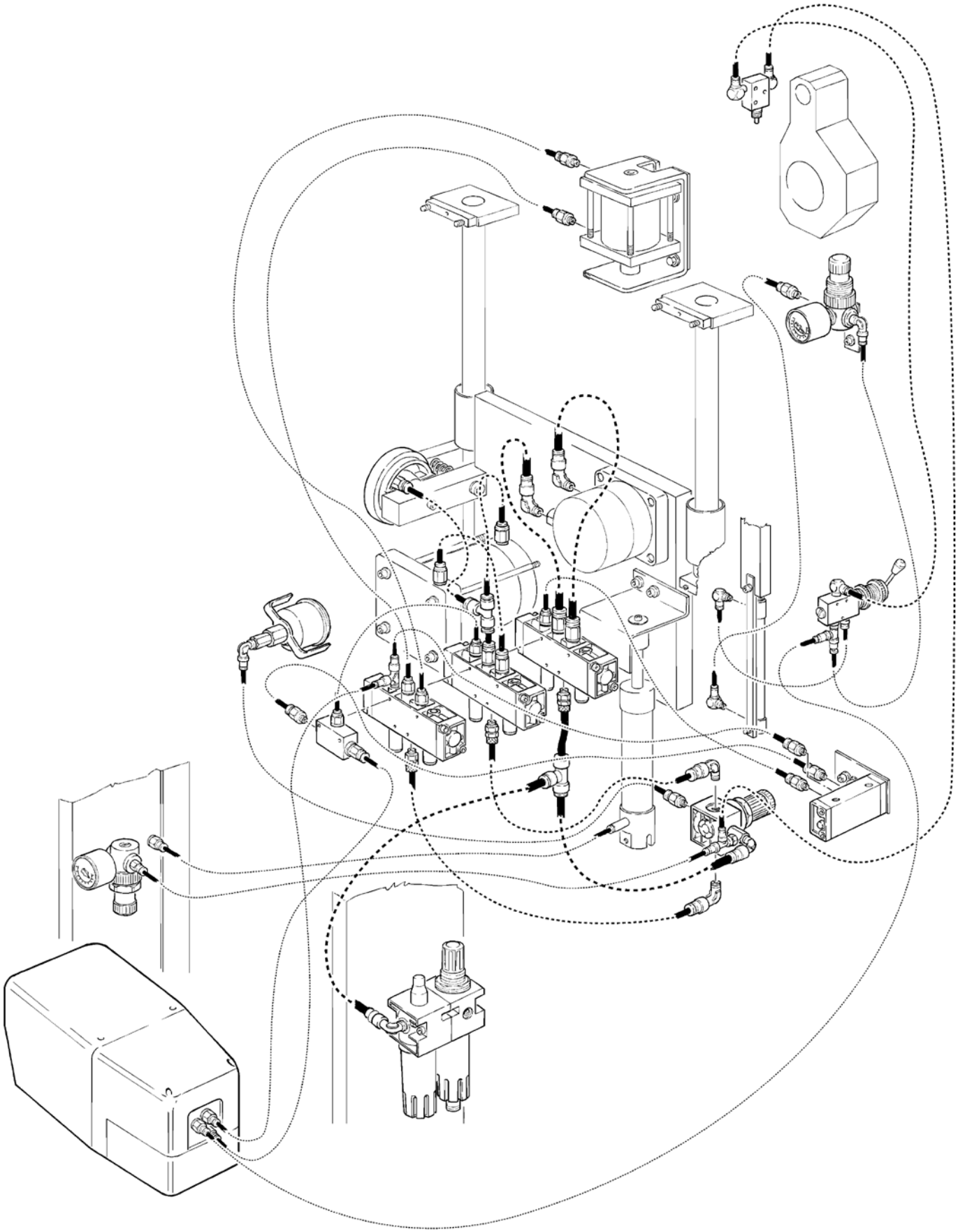

SCHEME C - Plates location

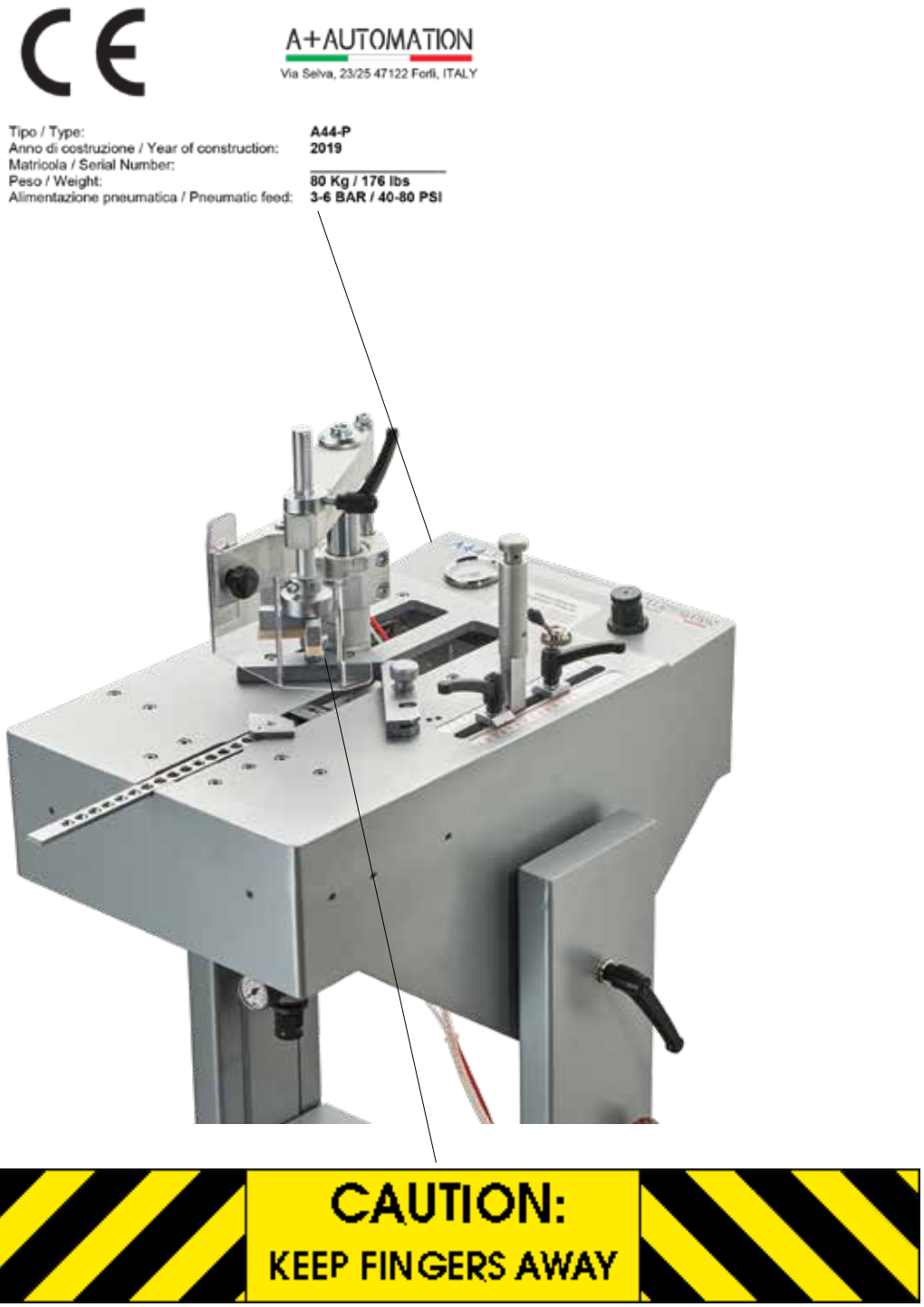

SCHEME D - SHARPENING TABLE

	SOFT WOOD			HARD WOOD		
Height mm	Very soft wood	Soft wood	Averaged soft wood	Averaged hard wood	Hard wood	Very hard wood
H 03* mm	<>	<>	<>	MW	MW	MW
H 05* mm	MW	MW	MW	MW	MW	MW
H 07 mm	SW	SW	MW	MW	MW	HW
H 10 mm	SW	SW	MW	MW	HW	HW
H 12 mm	SW	SW	MW	HW	HW	HW
H 15 mm	SW	SW	MW	HW	HW	HW

* Wedges available only on customer's request for specific order quantities (to be confirmed).

SW Suitable for soft wood such as: Cedar, Pine, Bass, Banak, Obeche, Poplar
Other materials: Vertical Grain MDF

MW Suitable for soft wood such as: Cedar, Cherry, Oak, Ramin, Poplar, Maple, Pine
Other materials: Vertical grain MDF, Polystyrene, PVC

HW Suitable for soft wood such as: Oak, Ash, Hickory, Pecan, Maple, Cherry, Ramin
Other materials: Horizontal grain MDF

	In order to stack 2 or more V-nails per junction, use V-nails coded MW or lower.

APM Mouldings

Chamton Pty Ltd

For sales, service and spare parts

www.apm-mouldings.com.au

APM Mouldings 120-130 Bolinda Rd Campbellfeld, VIC 3061
Ph: 03 038301 9199 | Fax 03 9357 4077 | Email apmoffce@chamton.com
www.apm-mouldings.com.au

Australian Owned Family Company
Quality Moulding Manufacturers and Distributors

FOR ORDERS
Available 24/7